DIRECT CLUTCH

COMPONENTS

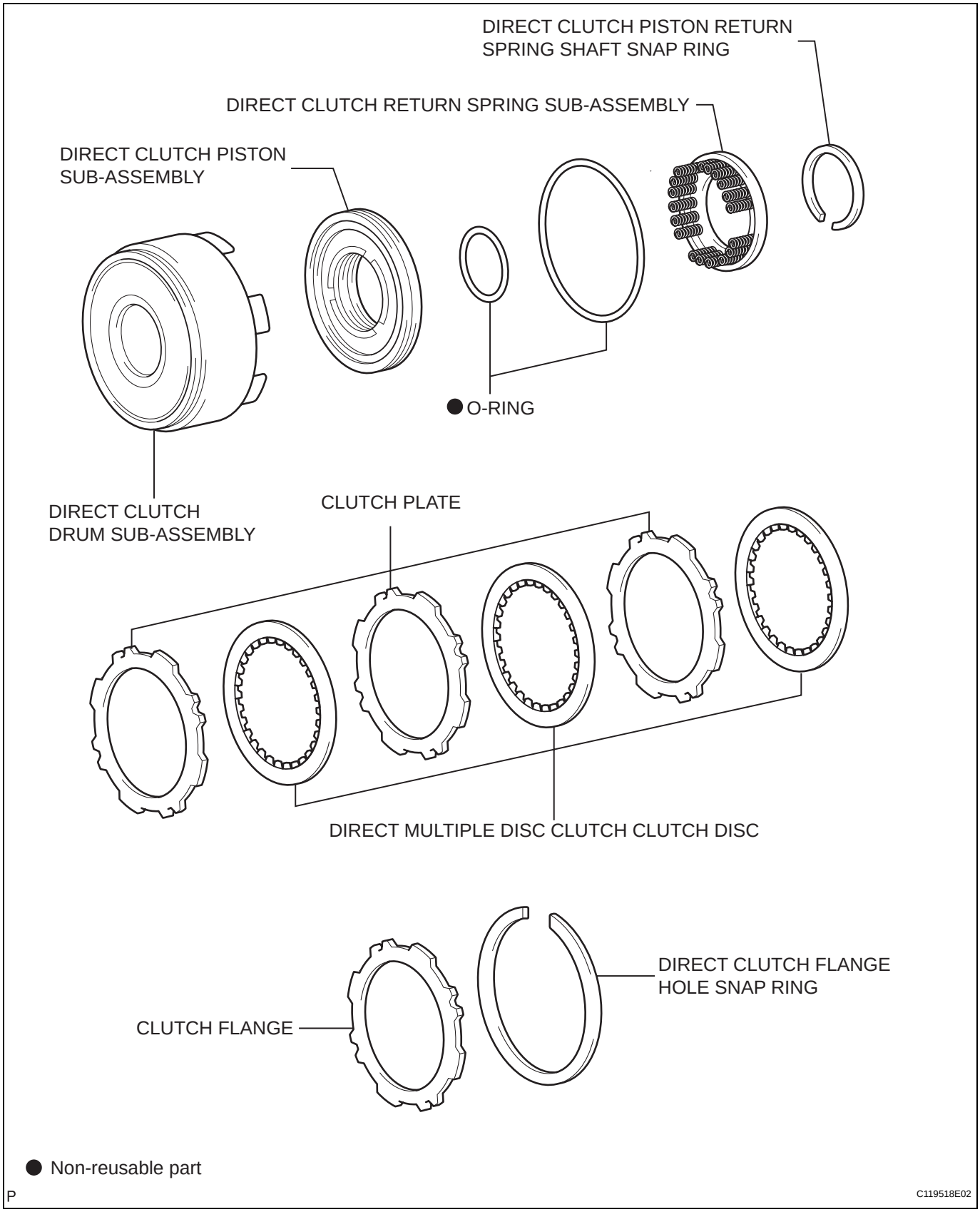

AX

cardiagn.com

DISASSEMBLY

1. INSPECT PACK CLEARANCE OF DIRECT CLUTCH (See page AX-222)

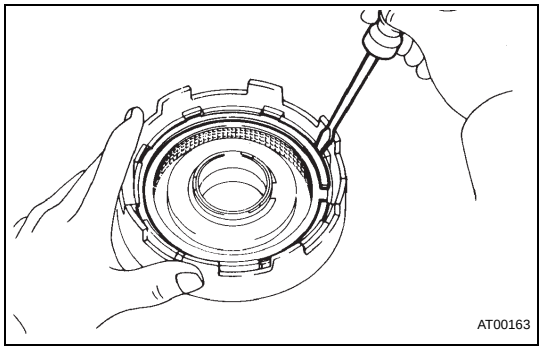

2. REMOVE DIRECT CLUTCH FLANGE HOLE SNAP RING

(a) Using a screwdriver, remove the direct clutch flange hole snap ring from the direct clutch drum sub-assembly.

3. REMOVE DIRECT MULTIPLE DISC CLUTCH CLUTCH DISC

(a) Remove the clutch flange, 3 direct multiple disc clutch clutch disc and 3 clutch plates from the direct clutch drum sub-assembly.

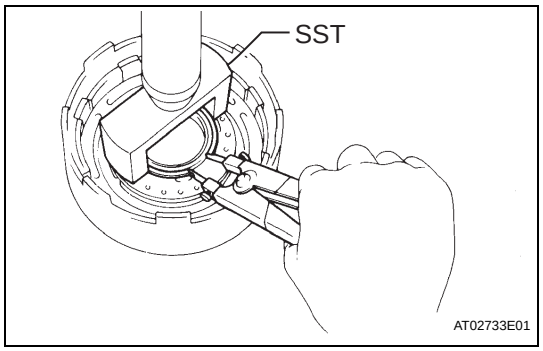

4. REMOVE DIRECT CLUTCH PISTON RETURN SPRING SHAFT SNAP RING

(a) Place SST on the spring retainer and compress the springs with a press.
SST 09350-32014 (09351-32070)

(b) Using a snap ring pliers, remove the direct clutch piston return spring shaft snap ring from the direct clutch drum sub-assembly.

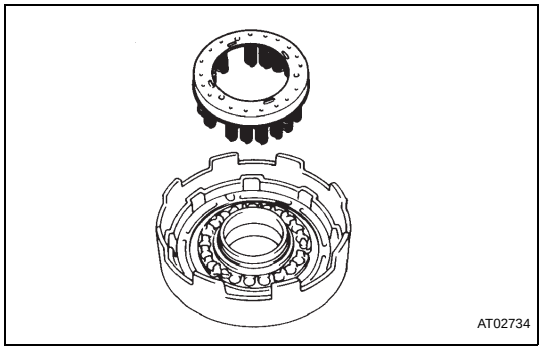

5. REMOVE DIRECT CLUTCH RETURN SPRING SUB-ASSEMBLY

(a) Remove the direct clutch return spring sub-assembly from the direct clutch drum sub-assembly.

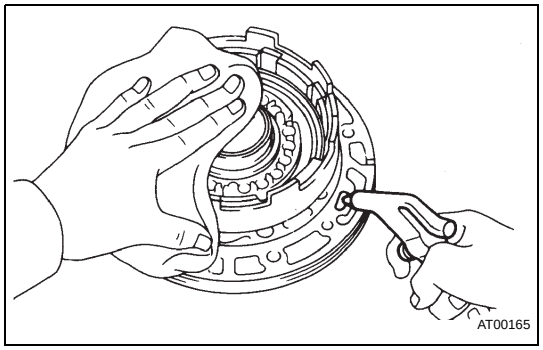

6. REMOVE DIRECT CLUTCH PISTON SUB-ASSEMBLY

(a) Install the direct clutch drum sub-assembly on the oil pump assembly.

(b) Apply compressed air to the oil pump to remove the direct clutch piston sub-assembly (if the piston does not come out completely, use needle-nose pliers to remove it).

(c) Remove the direct clutch sub-assembly from the oil pump assembly.

cardiagn.com

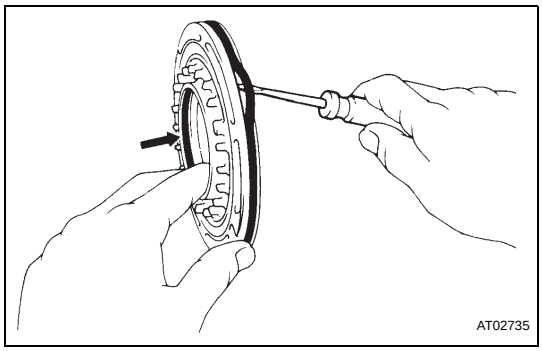

(d) Using a screwdriver, remove the 2 O-rings from the direct clutch piston sub-assembly.

7. INSPECT DIRECT CLUTCH PISTON SUB-ASSEMBLY (See page AX-222)

8. INSPECT DIRECT MULTIPLE DISC CLUTCH CLUTCH DISC (See page AX-222)

9. INSPECT DIRECT CLUTCH DRUM SUB-ASSEMBLY (See page AX-223)

INSPECTION

1. INSPECT PACK CLEARANCE OF DIRECT CLUTCH

(a) Install the direct clutch on the oil pump.

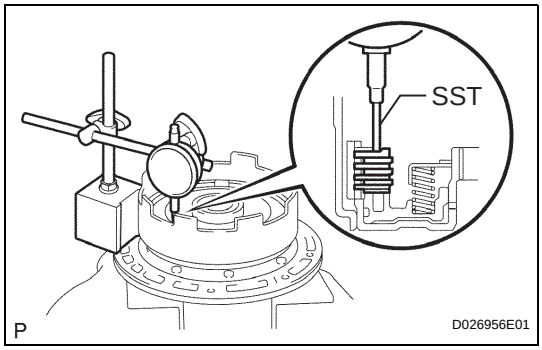

(b) Set a dial indicator and measuring terminal (SST) together, and measure the direct clutch pack clearance while applying and releasing compressed air (392 - 785 kPa, 4 - 8 kgf/cm2, 57 - 114 psi).
SST 09350-32014 (09351-32190)
Pack clearance:
0.49 to 0.89 mm (0.0192 to 0.0350 in.)
If the pack clearance is greater than the maximum, inspect each component.

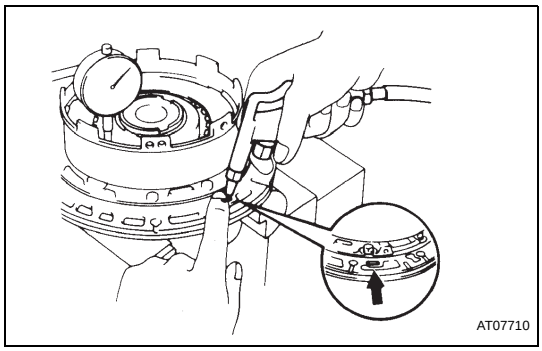

AX

2. INSPECT DIRECT CLUTCH PISTON SUB-ASSEMBLY

(a) Check that the check ball is free by shaking the direct clutch piston sub-assembly.

(b) Check that the valve does not leak by applying low-pressure compressed air.

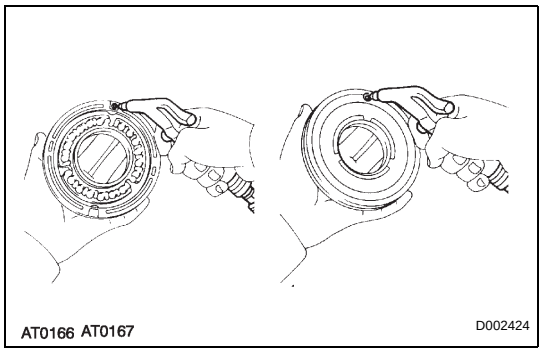

3. INSPECT DIRECT MULTIPLE DISC CLUTCH CLUTCH DISC

(a) Check if the sliding surfaces of the discs, plates and flanges are worn or burnt. If necessary, replace them.
HINT:
- If the lining of the disc is peeling off or discolored, or even if a part of the printed number is defaced, replace all discs.
- Before assembling new discs, soak them in ATF for at least 15 minutes.

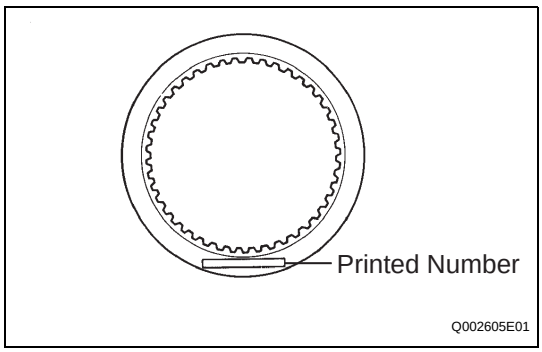

cardiagn.com

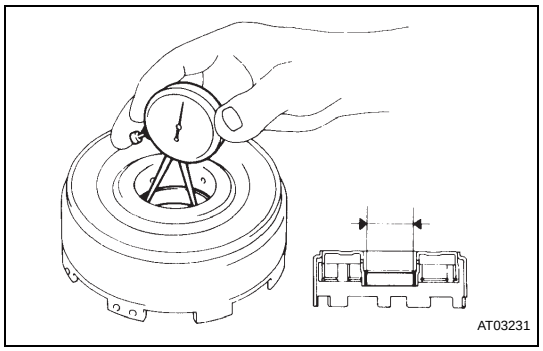

4. INSPECT DIRECT CLUTCH DRUM SUB-ASSEMBLY

(a) Using a dial indicator, measure the inside diameter of the direct clutch drum sub-assembly bushing.
Maximum inside diameter:
48.27 mm (1.9004 in.)
If the inside diameter is greater than the maximum, replace the direct clutch drum sub-assembly.

REASSEMBLY

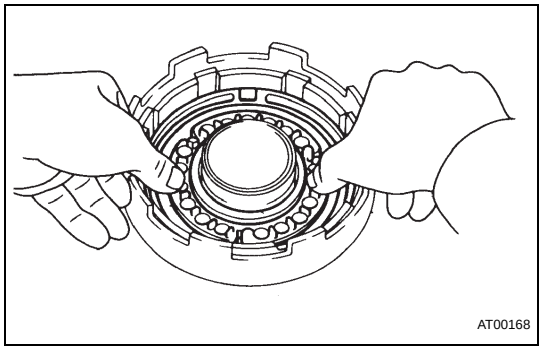

1. INSTALL DIRECT CLUTCH PISTON SUB-ASSEMBLY

(a) Coat the 2 new O-rings with ATF and install 2 new O-rings to the direct clutch piston sub-assembly.
(b) Being careful not to damage the O-rings, press the direct clutch piston sub-assembly into the drum with the cup side up.

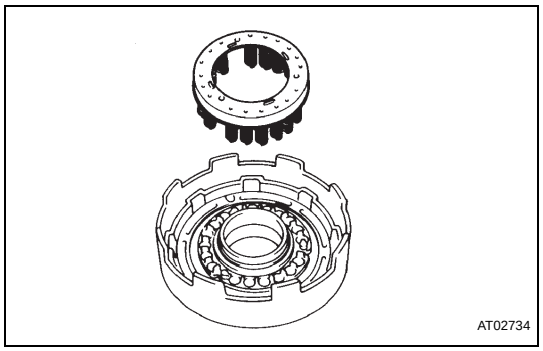

2. INSTALL DIRECT CLUTCH RETURN SPRING SUB-ASSEMBLY

(a) Install the direct clutch return spring sub-assembly to the direct clutch drum sub-assembly.

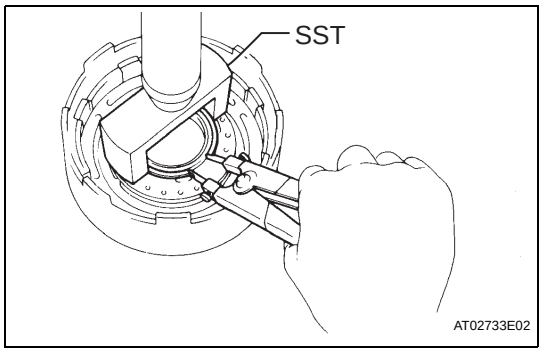

3. INSTALL DIRECT CLUTCH PISTON RETURN SPRING SHAFT SNAP RING

(a) Place SST on the direct clutch return spring sub-assembly, and compress the direct clutch return spring sub-assembly with a press.
SST 09350-32014 (09351-32070)
(b) Using snap ring pliers, install the direct clutch piston return spring shaft snap ring to the direct clutch drum sub- assembly.
HINT:
Be sure the end gap of the snap ring is not aligned with the spring retainer claw.

cardiagn.com

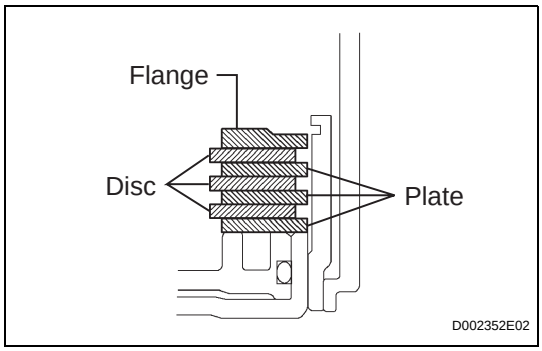

4. INSTALL DIRECT MULTIPLE DISC CLUTCH CLUTCH DISC

(a) Install the 3 clutch plates and 3 direct multiple disc clutch clutch disc in order.
Install in order:
P = Plate D = Disc F = Flange P - D - P - D - P - D - F

(b) Install the clutch flange with the flat side facing downward.

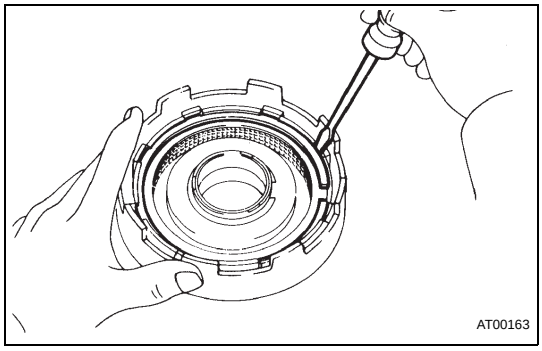

5. INSTALL DIRECT CLUTCH FLANGE HOLE SNAP RING

(a) Using a screwdriver, install the direct clutch flange hole snap ring to the direct clutch drum sub-assembly.

(b) Check that the end gap of the direct clutch flange hole snap ring is not aligned with one of the cutouts.

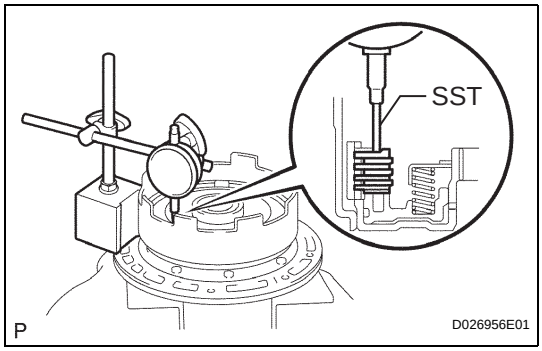

6. INSTALL PACK CLEARANCE OF DIRECT CLUTCH

(a) Install the direct clutch onto the oil pump.

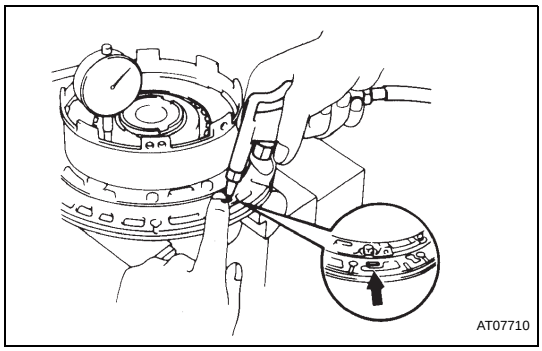

(b) Set a dial indicator and measuring terminal (SST) together, and measure the direct clutch pack clearance while applying and releasing compressed air (392 to 785 kPa, 4 to 8 kgf/cm2, 57 to 114 psi).
SST 09350-32014 (09351-32190)
Pack clearance:
0.49 to 0.89 mm (0.0192 to 0.0350 in.)
If the pack clearance is non-standard, select another flange.
HINT:
There are 4 different thickness for the flange.
Flange thickness: mm (in.)

thickness	thickness
2.60 (0.1024)	3.00 (0.1181)
2.80 (0.1102)	3.20 (0.1260)

AX

cardiagn.com